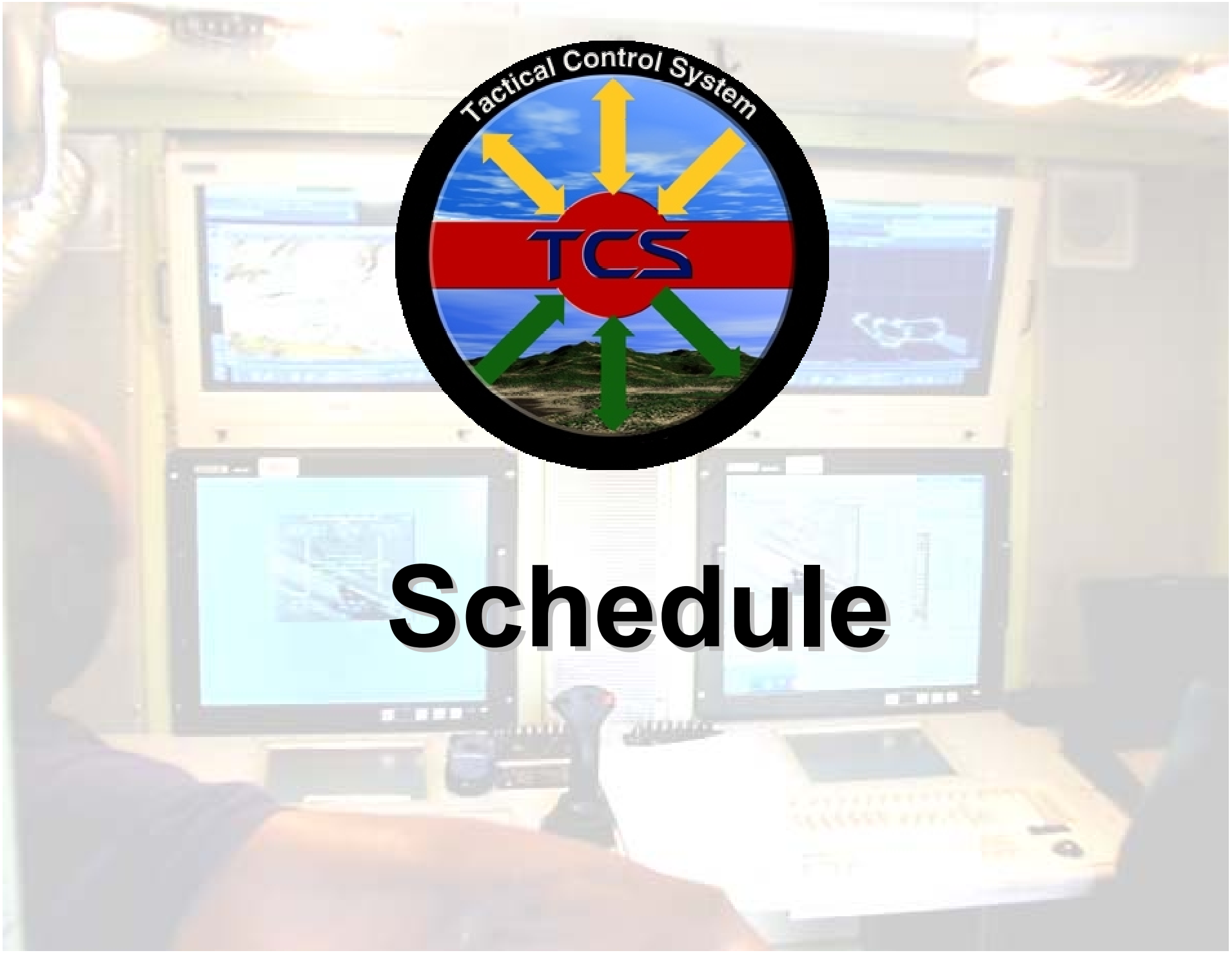

Schedule

TCS SCHEDULE

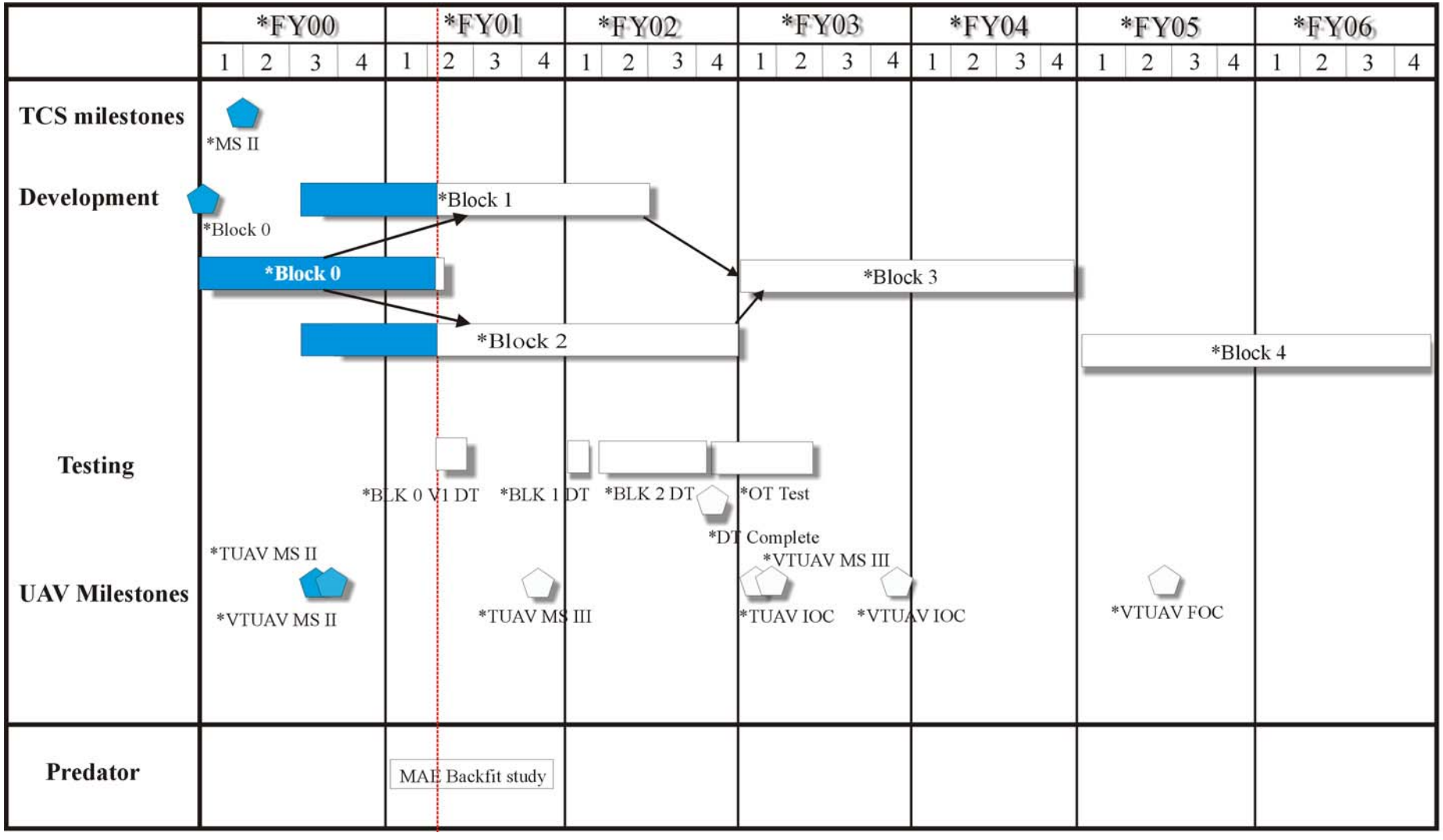

TCS TUAV/VTUAV SYSTEMS SCHEDULE

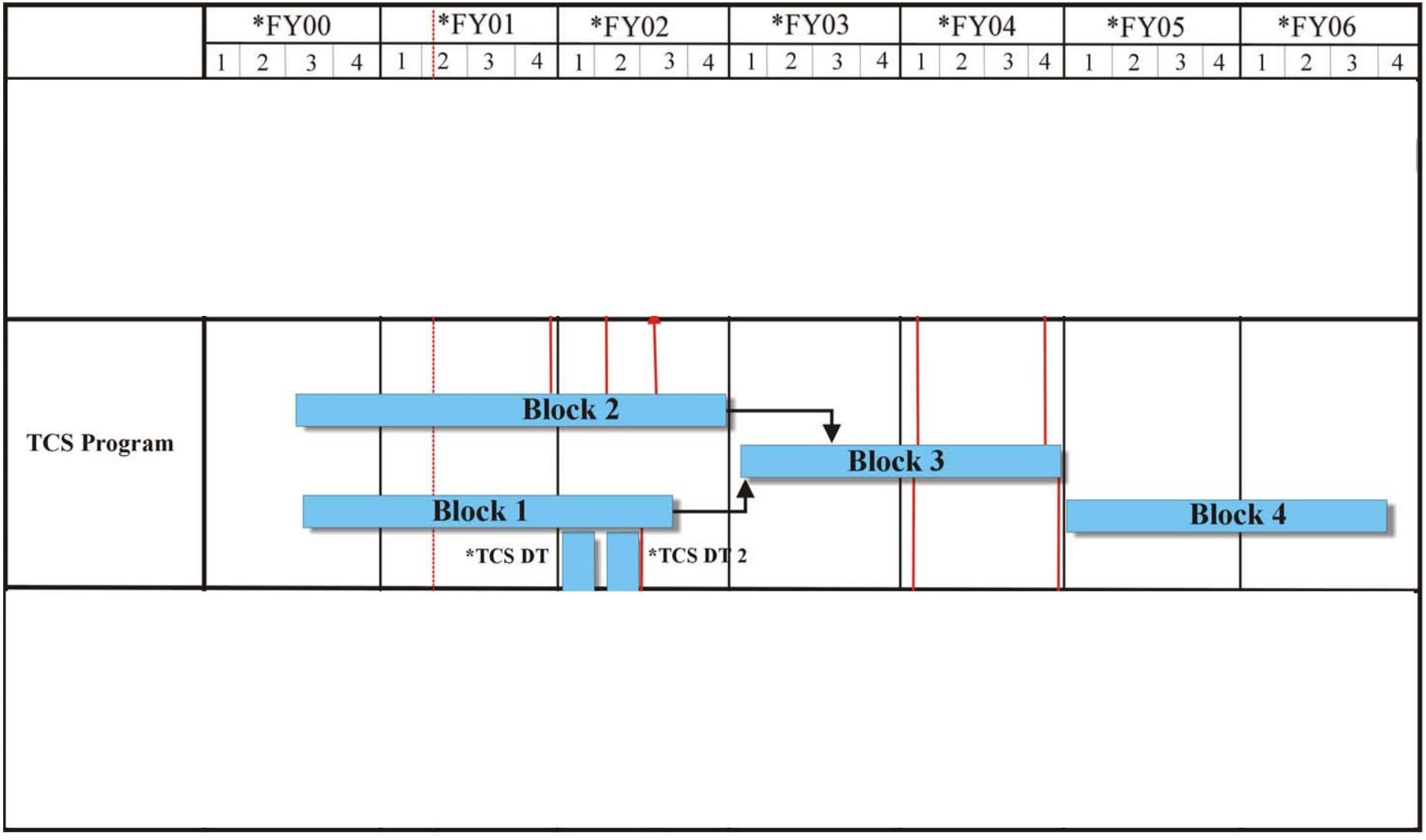

TCS TUAV/VTUAV SYSTEMS SCHEDULE

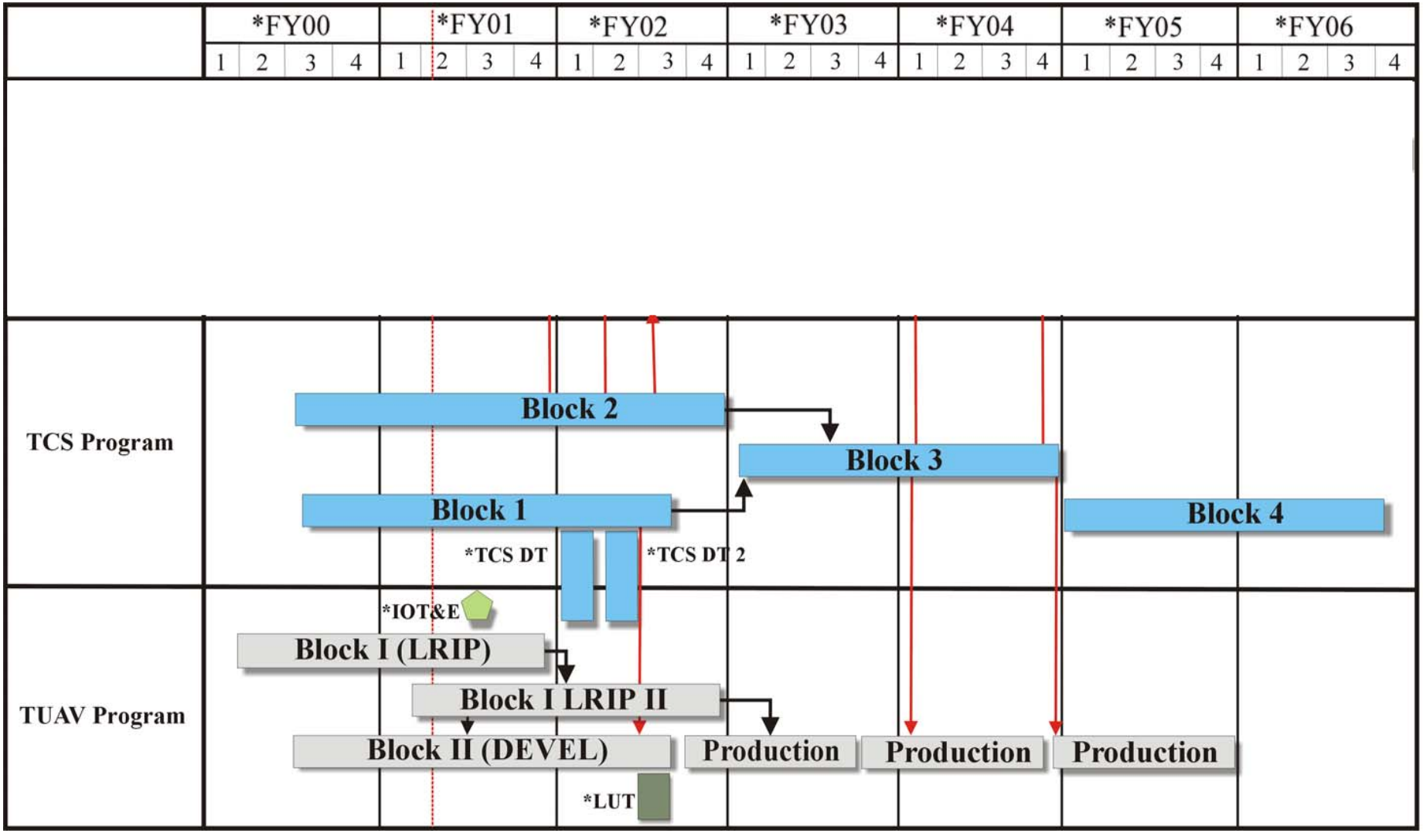
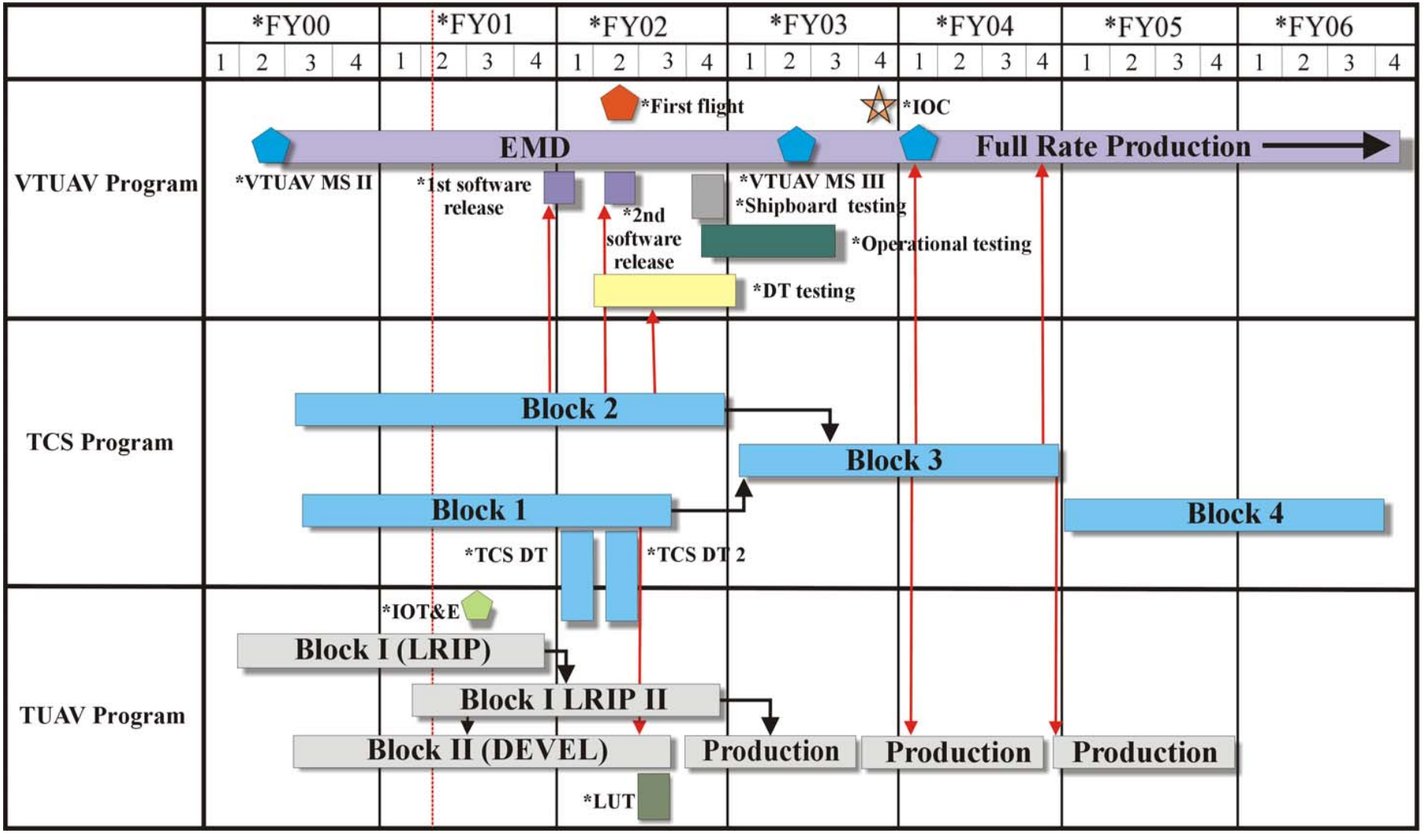
TCS TUAV/VTUAV SYSTEMS SCHEDULE